21.5 inch Industrial All In One Ultra Flat IP65 Panel PC





Waterproof Full Flat IP65 Seamless Front

- 21.5", 1920x1080, 16:9 Aspect Ratio
- Intel Cerelon Quad-core J1900, Optional i3/i5/i7
- 2G DDR3 RAM (Up to 4G/8G)
- 32G SSD (Up to 64G/128G/256G/500G)
- OS: Windows 7/8/10, Linux Optional
- 3mm Ultra Thin Front Bezel, Aluminum Alloy Enclosure

☼ Optional: Sunlight Readable(1000cd/m² Brightness)

Feature



WIFI (2.4G)

Power Button

Embedded Holes

Standard unit is not available. Can be customized for adjusting brightness

Waterproof Speaker Hole

Excellent Heat Dissipation Design

VESA Holes (75*75mm, 100*100mm)

OEM/ODM:
Enclosure Size
Whole Waterproof
5G WIFI



Interfaces





Optional Interfaces as Below

OEM/ODM:
2~8 *COM (RS232/RS485/RS422)
2*LAN (RJ45)
GPIO/LPT/Msata/Mini-PCIe

24V Power Supply



Industrial Ports



Touch Type

Front Panel IP65 Design, Water and Dust Proof

5-Wires Resistive Touch (One Point)
Life ≥35 million times

PCAP Touch (Ten Point)
Life≥50 million times



Dimension

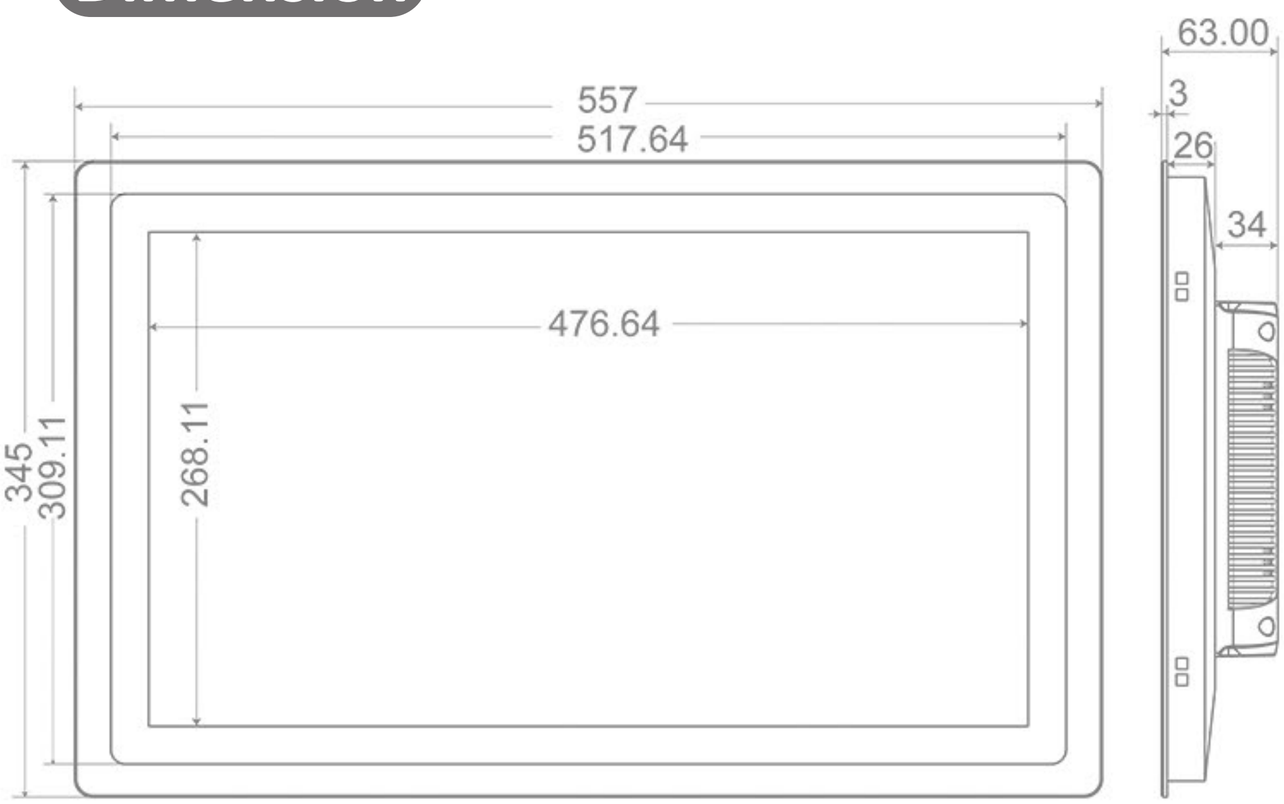

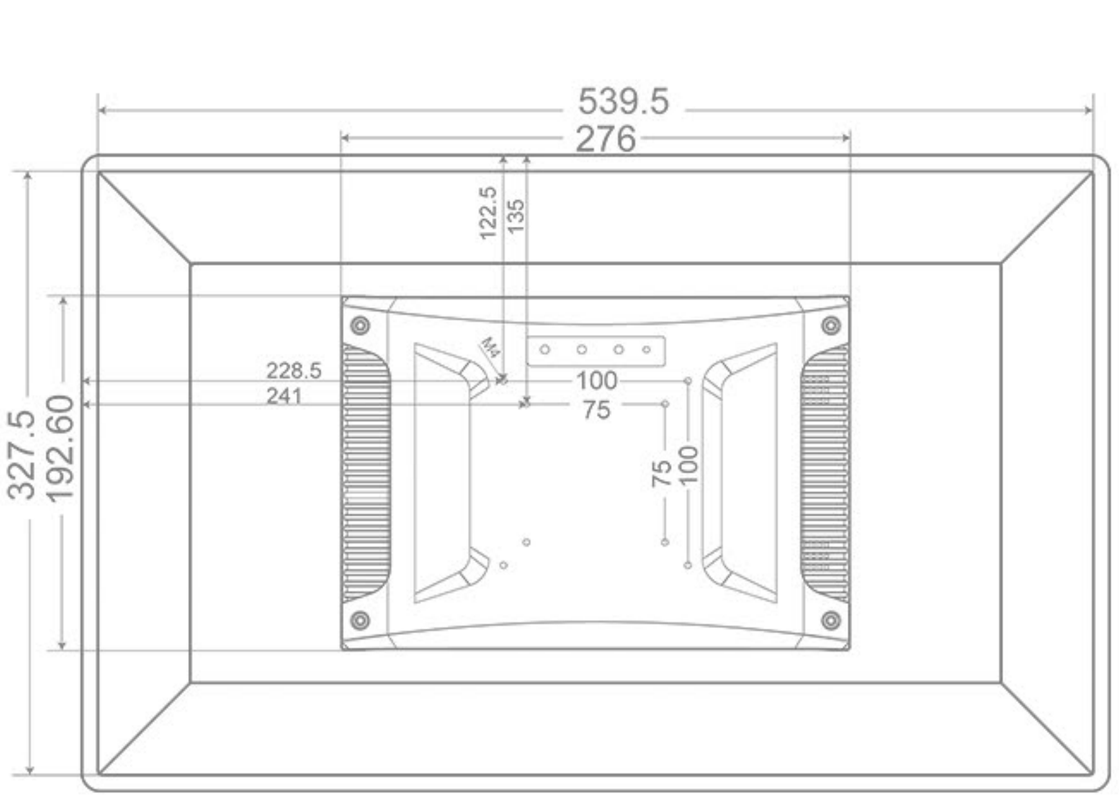

Installation



Embedded With Buckles(Default)



Folding Bracket Stand(Optional)



Wall Hung Kits(Optional)



Match VESA ARM(Optional)

Specification

Display	**Panel Type**	TFT LED (A+ grade)
	Screen Size	21.5 inch
	Housing Material	Aluminum Alloy Enclosure
	Screen Ratio	16:9
	Resolution	1920x1080
	Contrast	1000:1
	Display Colors	16.7 M
	Brightness	400cd/m2 (1000cd/m2 for Customized)
	Screen Pixel Pitch	0.264 mm
	Viewing Angle	(H)160 x (V)160
	Touch Screen Type	No Touch/Resistive Touch/Capacitive Touch
	Response Time	5ms
	LED Backlight Lifespan	50,000 h
	Color	Silver or Black (Can Customized)
Motherboard	**CPU**	Intel Cerelon Quad-core J1900 2.0 GHz, Optional i3/i5/i7
	RAM	2G DDR3, Optional Up to 4G/8G
	SSD	32G SDD , Optional Up to 64G/128G/256G/500G
	HDD	500GB/1TB HDD (Optional)
	WiFi	Built-in, 802.11a/b/g/n
	I/O	12V Power Adapter x1/USB2.0 x4/Internet Access x1/HDMI x1/VGA x1/Audio IO x1/COM x2 (Can Customized)
	OS	Windows 7/8/10, Linux
Others	**Power Supply**	External 12V/5A Power Adapter
	Power Consumption	≤ 45W
	Temperature	Operation: -10°C～60°C, Transportation & Storage: -20°C～60°C
	Humidity	Operation: 40%～65%, Transportation & Storage: 35%～80%
	Installations	Default: Embedded with Buckles Optional: Wall Hung Kits/Desktop Stand/Folding Bracket Stand/VESA Mounted
	Certificates	CE/FCC/RoHS
	Warranty	1 Year
	Accessories	Power Adapter/Embedded Clips/Manual